CLIENT PROMOTIONAL KIT

2-carton assembly & packaging solution
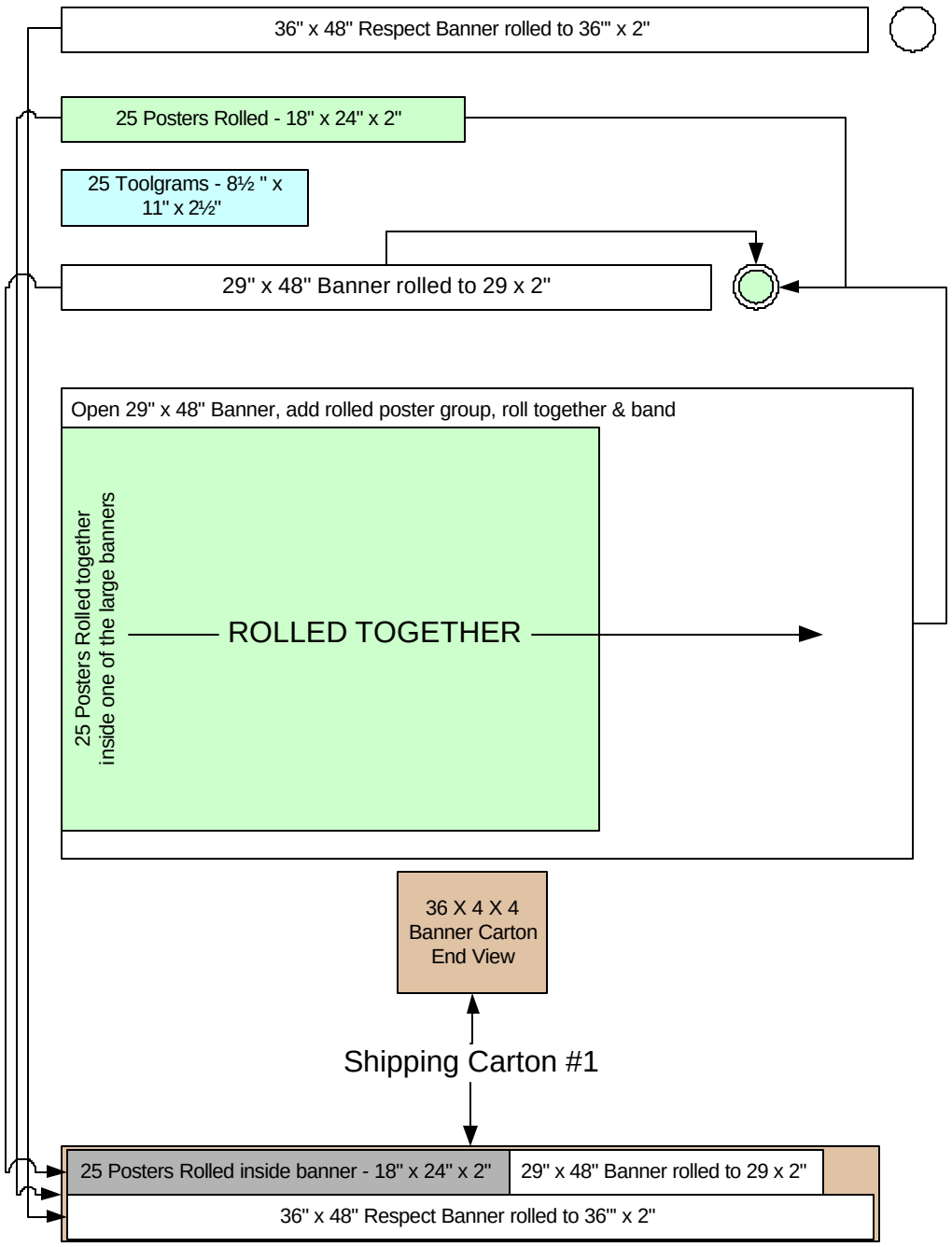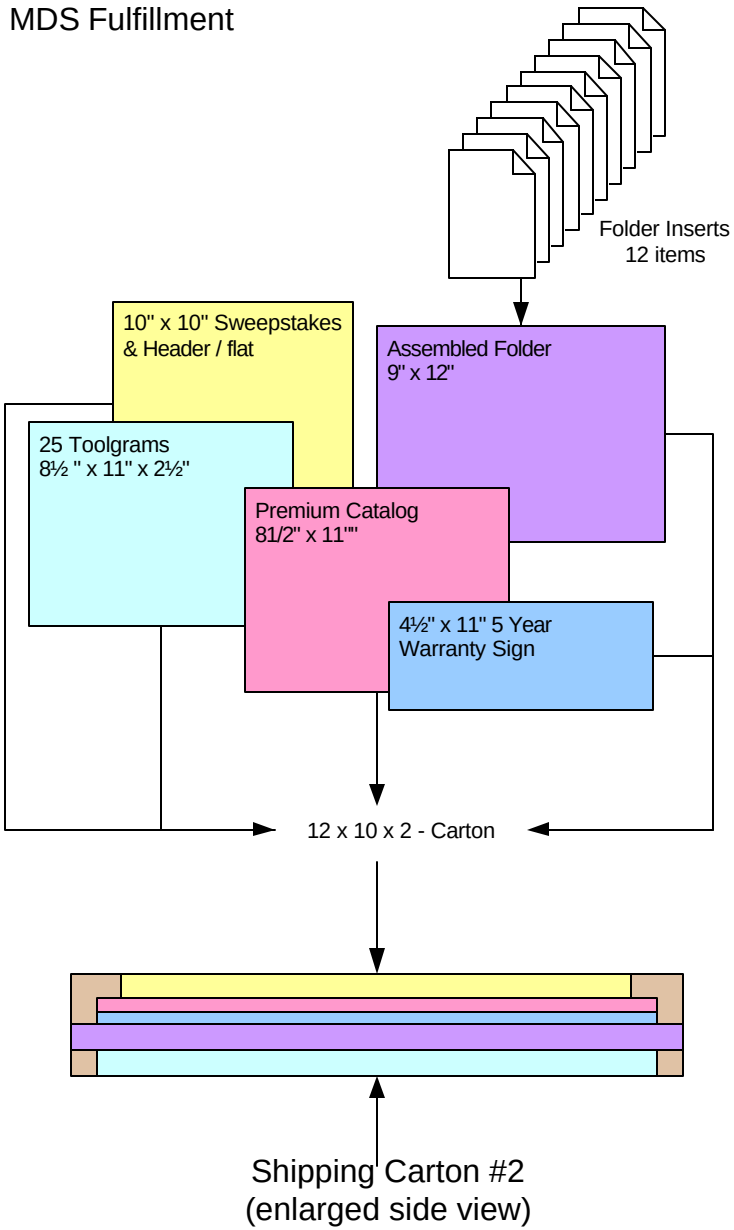
MDS Fulfillment